enGage®



NX II

Digital Instrumentation

Parker CURTIS

Digital Instrumentation

The Curtis enGage® NX II (NX2) is a color, 2.1 inch, touch screen display, packaged in a 52 mm gauge form factor. With a bright, high resolution, capacitive touch display and optionally integrated wireless connectivity, the NX2 enables unprecedented interaction and information visualization. The NX2 is customizable in a multitude of ways, allowing OEMs to realize unique brand identity quickly. The display is equipped with CAN-FD, the latest CANbus technology, which provides faster data rates and increased reliability than CAN 2.0. Optional Bluetooth and Wi-Fi enable communication to a mobile application or fleet telematics portal. Optional RFID enables vehicle security and operator identification through an RFID tag or mobile phone.

The NX2 is part of the unified enGage NX product portfolio. All enGage NX products share a common user experience, development environment, and a set of companion tools, making it easy to move between products within the platform.

Features



- 2.1 in, color, 480x480 pixel, touch screen LCD.
- Bright, optically bonded, 600 nit LCD ensures viewing in any lighting condition.
- Enables visualization of machine information and a unique brand identity through a fully customizable user interface.
- Out-of-the-box application software.
- 52 mm gauge form factor enables easy panel mounting in new and existing applications.
- One CAN FD port, with J1939* and CANopen support, provide superior EMC and reliability, and backwards compatibility to CAN 2.0.
- Optional WiFi and Bluetooth wireless connectivity communicate machine data to a data server or third-party applications.
- Optional RFID/NFC enables easy operator identification using compatible ISO 14443A RFID tags or supported mobile phone application.
- One analog and one digital input allow connection of external I/O devices.
- Integrated hour meters.
- Optional buzzer enabling operator alerts to critical events.
- Optional fixed frequency audio alarm to alert operators of machine issues and warnings.
- Operates in demanding conditions with an operational temperature range of –40° to +70°C and IP67 front and rear ingress protection.
- Wide voltage range, 12 to 48 VDC, supports a variety of applications.
- CE, UKCA and ROHS3 compliance and UL recognition ensure compatibility with global regulatory safety.*

**Pending*



Specifications

Electrical

Voltage Ranges:

Nominal	Min.	Max.
12–48V	9V	60V

Operating Currents

Nominal Voltage	Minimum Current	Maximum Current
9V	94mA	190mA
12V	72mA	140mA
24V	40mA	75mA
36V	30mA	55mA
48V	25mA	45mA
60V	22mA	40mA

CAN Baud Rate:

Default: 250Kbit/s
100 Kbps to 5 Mbps

Inputs

Switch Input Characteristics:

Specification	Value
Input Range	0–60V
Active High Threshold	9.0V to the maximum B+ voltage
Ground Potential	1.0V
Input Impedance	144.9–147.9kΩ

Analog Input Characteristics:

Specification	Value
Voltage Input Range	0–60V
Voltage Measurement Range	0–10V
Voltage Resolution	10mV
Voltage Measurement Error	±(2.5% + 40mV)
Resistance Measurement Range	0–10kΩ
Resistance Resolution (0–1.2kΩ)	1–5Ω
Resistance Resolution (1.2–10kΩ)	5–35Ω
Resistance Measurement Error (0–1.2kΩ)	±(3% + 2Ω)
Resistance Measurement Error (1.2kΩ–10kΩ)	±(6%+100Ω)
Input Impedance (Voltage Mode)	144.9–148.0kΩ

Environmental

Temperature Range:

Operating: –40° to +70°C
Storage: –40° to +85°C

Humidity:

Soak: Designed to meet EN 60068-2-78:2012
Cyclic: Designed to meet EN 60068-2-30:2005

Ingress Protection:

Designed to meet EN 60529-2020 IP67
IP67 front and rear (with mating connector connected)

Shock:

Designed to meet EN 60068-2-27:2008

Vibration:

General: ENO60068-2-6:2007
Random: ENO60068-2-64:2008+A1:2019
Resonance: ENO60068-2-6:2007

Specifications continued

EMC Specifications

ESD:

EN 12895:2015+A1:2019 (level 4)

Emissions:

EN 12895:2015+A1:2019

Immunity:

Radiated: EN 12895:2015+A1:2019

Frequency Magnetic Field: EN 12895:2015+A1:2019

Regulatory Approvals

UL*: UL recognized component per UL583

CE*: EMC Directive 2014/30/EU and RoHS2 as amended by 2015/863/EU and 2017/2102/EU.

**Pending*

Model Chart

Model	Curtis PN	Description
3250RCBT	17785700-001	NX2 with Touch Screen, Buzzer, and 120 Ohm Resistor
3250RCT	17785700-003	NX2 with Touch Screen and 120 Ohm Resistor

Please discuss custom model inquiries with a Curtis sales member.



Typical Wiring Diagram

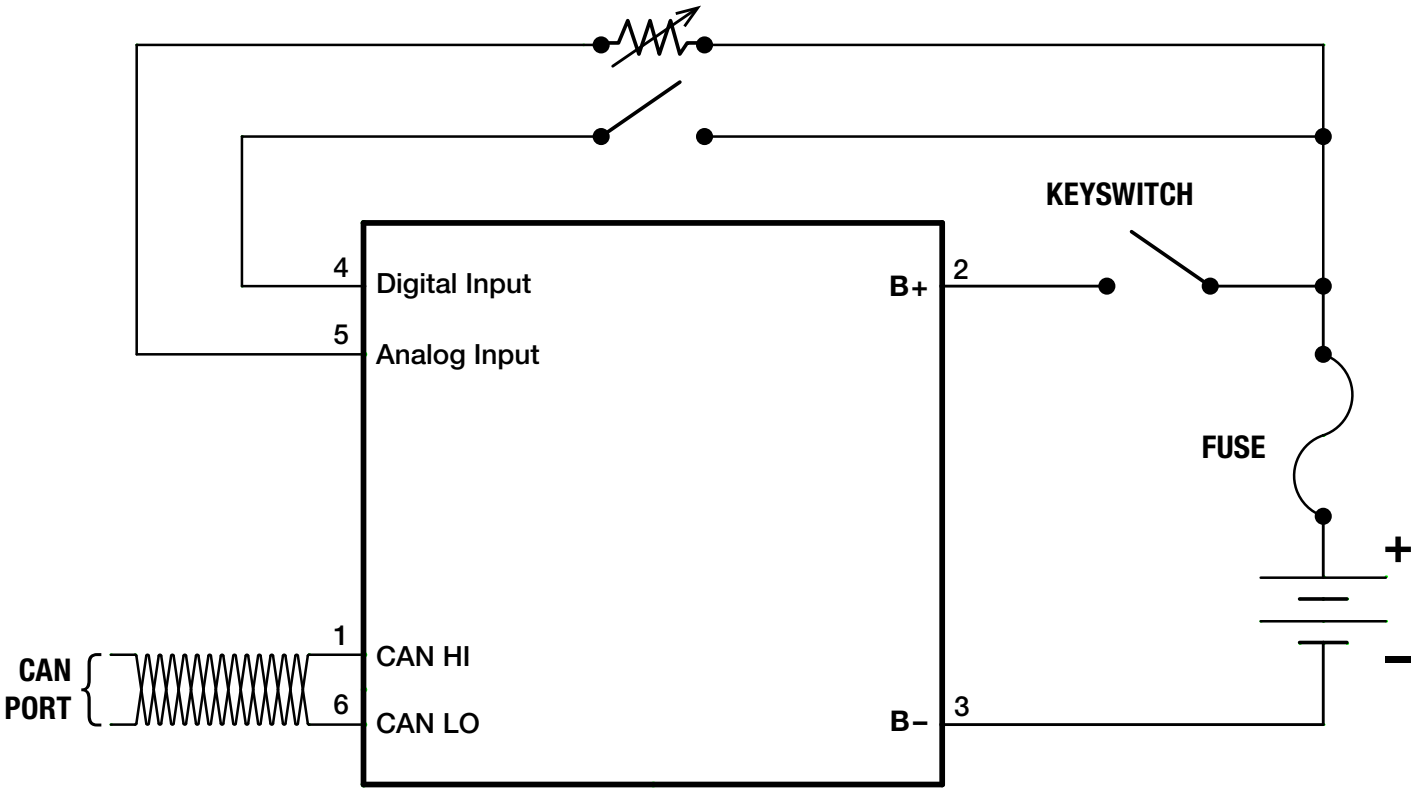



Connector

The signals are assigned as shown in the table below.

Pin No.	Signal Name	Description
1	CAN HI	CANbus High
2	B+	Battery Positive
3	B–	Battery Common
4	Digital Input	Switch Input
5	Analog Input	Analog Input
6	CAN LO	CANbus Low

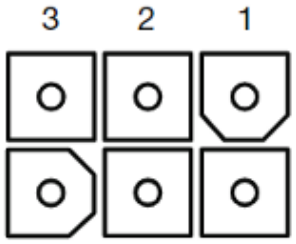

Mating Connector

The mating connector for the 3250 is an 6-pin Mini-Universal MATE-N-LOK housing from TE Connectivity. The part numbers to assemble a mating assembly are shown in the table below.

Mating Connector Part Numbers:

Item	Part Description	TE P/N
1	Connector Housing	794895-1
2	Terminal (18 – 24 AWG)	770904-X
3	Interface Seal	794772-6
4	Wire Seal	794758-1
5	Cavity Plug Seal (for unused terminal positions)	794995-1

Dimensions (mm)

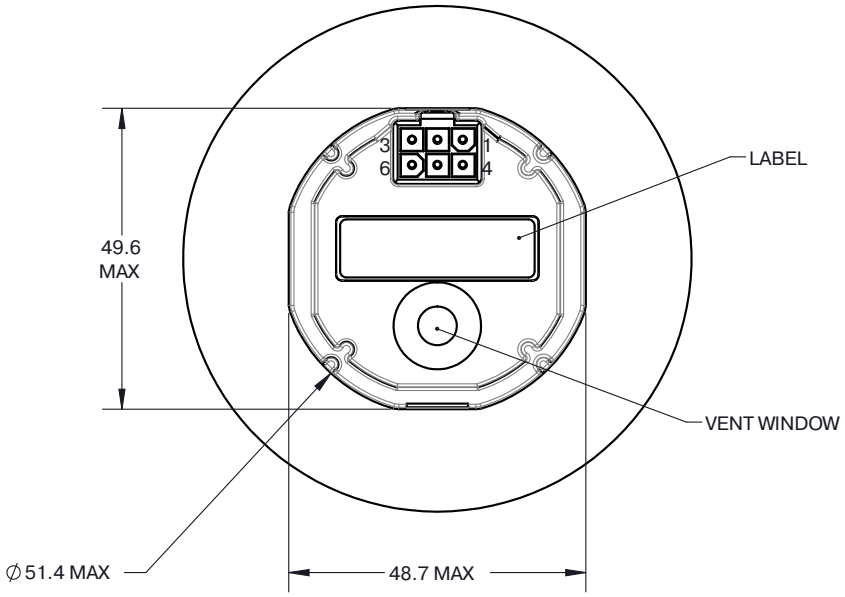

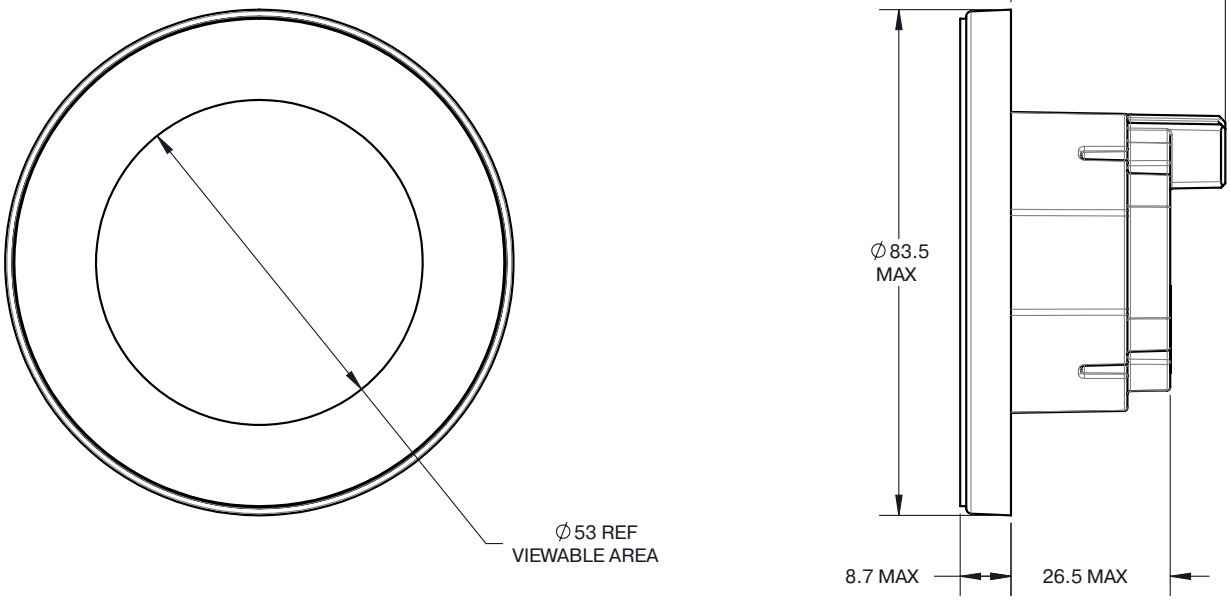

Warranty

Two year limited warranty from time of delivery.

Parker Hannifin Corporation
Electronic Controls & Motion Division
200 Kisco Ave
Mt. Kisco, NY 10549
phone 1.914.666.2971

www.parker.com/ecm

50398 Rev F 6/26

© 2026 Parker Hannifin Corporation. Specifications subject to change without notice.